*For Residential and Commercial Applications*

| | | | |
|---|---|---|---|
| Job Name | | Engineer / Architect | |
| Job Location | | Wholesaler | |
| Submittal Date | | Contractor | |

Product Submittal Form

# PLB207X 1/4 Turn Straight Stop - Cold Expansion Barb x Compression

***Use:*** For use only in potable water distribution systems, hot and cold, in accessible locations only

***Part Listing:***

☐ PLB207X B 1/2" nom cold expansion barb (for PEX) x 3/8" OD compression, chrome finish, bulk

☐ PLB207X P 1/2" nom cold expansion barb (for PEX) x 3/8" OD compression, chrome finish, bagged

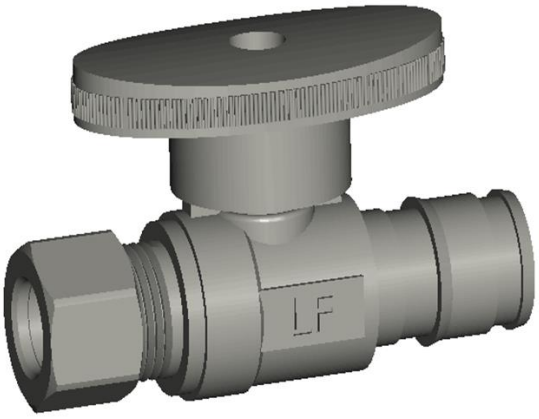


| ***PART DIMENSIONS*** *(Inches)* | | | | | |
|---|---|---|---|---|---|
| ***Model*** | ***DIM. A*** | ***DIM. B*** | ***DIM. C*** | ***DIM. D*** | ***DIM. E*** |
| PLB207X | 1.77 | 1.13 | 1.51 | 2.31 | .94 |

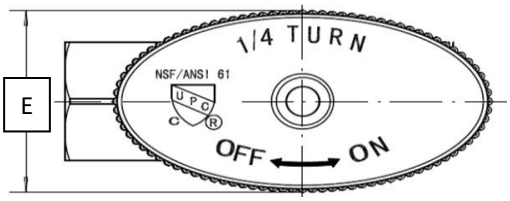


| ***Operating Specifications*** | |
|---|---|
| ***Temperature*** | ***Pressure*** |
| 40°- 160° F | 125 PSI maximum |

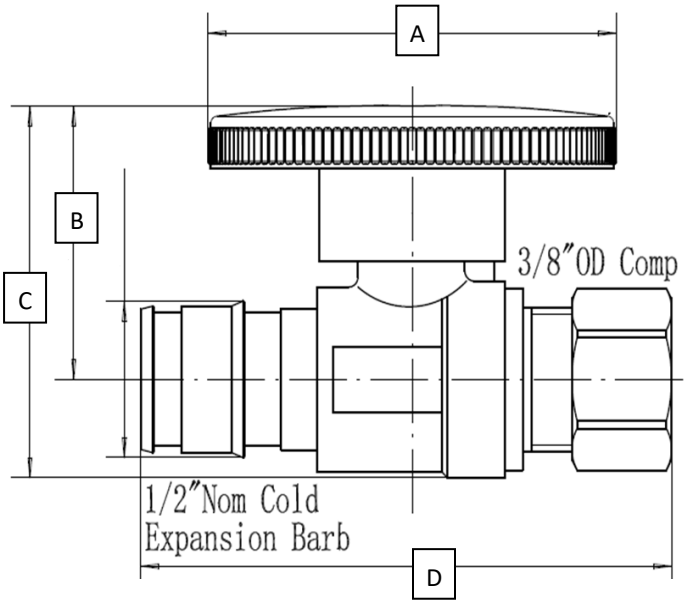


| ***STOP MATERIAL SPECIFICATIONS*** | |
|---|---|
| ***Body*** | *Brass, plated* |
| ***Stem*** | *Brass* |
| ***Ball*** | *Brass, plated* |
| ***Seats*** | *PTFE* |
| ***O-ring*** | *Rubber* |
| ***Handle*** | *ABS, plated* |
| ***Handle Screw*** | *Stainless steel* |
| ***Compression Nut*** | *Brass, plated* |
| ***Compression Sleeve*** | *Brass* |
| ***Adaptor*** | *Brass, plated* |

***Listings & Certifications:***

- IAPMO listed to ASME A112.18.1 / CSA B125.1 (includes NSF/ANSI 372 and NSF/ANSI/CAN 61)

***This specification and all information contained herein is the confidential and exclusive property of Brasscraft Manufacturing Company and shall not be disclosed to others without the written consent of Brasscraft Mfg. Co. This specification must be returned to Brasscraft Mfg. Co. if requested.***

PLUMBSHOP®



©2019 Brasscraft Manufacturing Company